Rocky Mountain Audio Fest 2010

Absolute Fidelity

Genesis Advanced Technologies • 654 S Lucile St • Seattle • WA 98108 • Tel: 206-762-8383
www.genesisloudspeakers.com • www.absolutefidelity.com • info@genesisloudspeakers.com

Editor's Say

It has been over five years since I started demonstrating during audio shows and at dealer events not with a CD player or turntable, but with a computer server. At first, I was universally laughed at. "There is no way that a computer can sound as good as the latest XXXXXX CD player or the YYYYYY turntable," I was told.

Well, it's now 2010, and no one's laughing anymore. In fact, there is a plethora of hot new music servers on the market, and many other manufacturers are now demonstrating with a music server during audio shows.

High resolution digital downloads are getting more and more common. Unfortunately, some of these are nothing more than up-sampled 16bit/44.1kHz Redbook CD-quality files, but there are enough real high-rez files to make it worthwhile having a computer-based music server.

Even The Beatles have put out a 24-bit/44.1kHz collection on a USB thumb drive in a beautiful machined aluminum apple.

Unfortunately, there is also a lot of marketing hype for the flavor of the day. In this issue, I will try to cut through the fog and bring you closer to a reference-quality computer-based music server.

We will detail exactly how to build one – with pictures, a bill of materials and full instructions. No more excuses for not moving forward on the biggest advance in music reproduction since the introduction of "Perfect Sound Forever".

We also take some of the hype out of cables with a short primer on cable design.

Cheers!
Gary

Building the Absolute Fidelity® Music Server

Since posting the white paper on building an Absolute Fidelity® music server on the Genesis loudspeakers website, we've had over 5,000 downloads. This update documents the experience of building the actual server that was used at the 2010 Rocky Mountain Audio Fest (and which will probably be used at Genesis demos for the next few years).

In the spirit of giving, no information will be withheld. Following this article to the letter will yield the exact same server that is used as a reference and as a music source for demonstrations done by Genesis. This document has also been used by the members of the Pacific Northwest Audio Society (www.audiosociety.org) to build their servers.

The completed Absolute Fidelity Music Server with the external music storage drive on top. The iPad used as the controller is also shown, together with a CD for scale.

Objectives

To build a reference quality music server for playback of digital music files. Since I use a Firewire DAC – the Weiss Minerva with a modified power supply and analog output stage – the focus for this build is for a server to drive the Minerva. However, it is just as relevant for a USB DAC. The mother-board chosen also has an optical Toslink output so that many other DACs can be used.

No consideration is given to things like Internet security, anti-virus protection, etc. Hence, the result of this build is not going to be a general purpose computer that can also be used as a music server. This is a personal computer that is specifically built to be a music server that can co-exist on the equipment rack in the audiophile's listening room (or in my loudspeaker development research lab).

Two key considerations are made:

1) The case must be shielded so that EMI/RFI is not allowed to escape to contaminate other components sitting on the same rack.
2) Vibration and noise must be kept to a minimum so that it does not intrude into the musical performance.

For convenience, we also wanted a small form factor similar to a piece of hifi equipment. We also want it to be extremely user friendly and be an economic solution that can be replicated by all our dealers and owners if they wanted to.

Parts List

The bill of materials is valid for Sep/Oct 2010. Computer parts go obsolete very quickly. Fortunately, the replacement parts will generally be better and cheaper!!

1) The <u>Intel DG43GT</u> motherboard chosen as the foundation for this build has connectors on the back panel for Firewire, USB and optical Toslink. In addition, the motherboard has on-board graphics so that a graphics card (which could contribute to noise pollution) need not be added to the build, contributing to simplicity. The board also has a header for a Coax S/PDIF output connector.

The parts used in the original build (without the large case fan).

2) <u>Intel Pentium E6300 Wolfdale</u> dual-core processor. The new Wolfdale version of the old Pentium processor has great power management for low heat generation. It also has Intel's Enhanced Speedstep technology which will allow us to reduce the speed of the processor to keep heat generation to a minimum.

3) <u>OCZ Gold 4GB DDR2 800</u> high performance gaming memory. The reason to use expensive gaming memory is not because we need the speed but because it has an attached heatsink for better heat management. As we will be disabling the system page file, we will want as much memory as possible. 4GB is the upper limit for the 32-bit version of the Windows 7 Professional that we will be using.

4) Kingston SSDNow 64GB Solid-State Drive (SSD). This will be used for the operating system. As less than 10GB is used for the operating system and player software, it can also be used for some local music storage. A normal spinning hard-disk introduces noise into the power system and should be avoided. The solid state drive not only makes the server boot up far faster, it also sounds far better.

5) Sony AD-7700S slim DVD/CD Reader Writer. This will be used for CD playback as well as for ripping CDs into the server.

6) CoolerMaster Elite 100 case. This is the tiniest case that will fit the motherboard chosen, plus all the parts. It feels strong and solid being made of galvanized steel – not plastic or aluminum – and has some inherent shielding against RMI/RFI – not to keep the interference out, but to keep it in the case. Unfortunately, it does not have enough space to install additional drives for music storage, but we want to keep spinning drives away from the power supply of the server anyway.

7) Noctua NF-P14 FLX 140mm case fan. To keep the server really quiet, we will be removing the installed fans on the power supply and the CPU cooler and replacing them with a single large slow-moving (and quiet) case fan.

8) Patriot PCXL25SR Convoy XL RAID enclosure. This enclosure allows two drives to be installed in RAID 0, RAID 1 or JBOD configurations and has both USB and SATA connections. RAID 1 will be used for better reliability. The two drives are mirrored so that if one should fail, the other will continue to operate until the failed disk is replaced. Should your music exceed the capacity of one drive, it can also be configured as JBOD and the amount of space is doubled. In this case, make sure to regularly back up your music storage.

9) Two Seagate Momentus XT 500GB Hybrid harddrives (ST95005620AS). These will be used for music storage in an external enclosure. These are normal spinning 2.5" hard-drives, but they have an integrated 4GB of solid-state SLC NAND storage. This means that up to 100 of your favorite tracks could be stored in solid-state memory for playback.

10) A copy of Windows 7 Professional. The reason for using the Pro version is that we will want to use Remote Desktop to control the server. Otherwise, you will need a screen and keyboard permanently installed at the server.

11) Apple iPad. This will be used as the remote control for the server. A low-spec netbook can also be used as a controller using remote desktop. We will also need an external wireless router to link between the music server and the iPad/netbook.

12) A computer screws kit. Unfortunately, this bill of parts is distinctly short of screws for the complete assembly – so, additional screws will be needed to complete the build.

13) 1/8" Soft Neoprene Gasket (about 1 sq.ft.) This is used to damp any vibrations in the bottom of the case, and also provides an additional layer of insulation between the case and the motherboard.

14) Dynamat Extreme (about 1 sq.ft.) This is an elastomeric/aluminum constrained layer damping material to reduce vibration at the top of the case. It is not used on the bottom as the conductive aluminum layer may short out the motherboard. We will also use it to block out the ventilation slots on the case.

Assembling the Server

Even if you have never assembled your own PC, this is not too difficult.

If the environment is very dry, the first thing to do

is to put some hand-lotion on your hands. This reduces the amount of static so that you don't shock the delicate electronic parts. It is always useful to have a grounding strap, and work on a clean surface. Without a grounding strap, occasionally touch something grounded to discharge any static you build up – especially before touching the motherboard or the CPU.

The first thing to do is to take apart the case in which you will be building the server. You will need a little container to hold all the screws and nuts that you will be removing so that you don't lose them.

Remove the top cover, the front plastic cover, and then the front bracket that will hold the SSD and the slim CD/DVD drive.

Next, remove the power supply, and the two posts that hold up the end of the power supply. Put these aside.

To reduce the possibility of vibration being generated, cut the neoprene to size and use it to damp the bottom of the case. Cover the air holes on both sides of the case with strips cut from the sheet of Dynamat as we want to force air through the power supply. To further reduce the possibility of EMI/RFI coming out of these air holes, cover the air holes with Dynamat Extreme.

Install the back plate supplied with the mother-board that will cover the connectors on the back of the motherboard. This back plate should snap in place with some effort needed to seat it properly as it can be a tight fit.

With a pair of wire snips, cut a hole in the ventilation grill on the back of the case. This will be used to route a SATA cable outside the case for the external music storage enclosure. Optionally, an eSATA connector can also be mounted on the case for this purpose.

Install the motherboard. Be careful to align all the connectors on the back of the motherboard

Take the case completely apart, and cover the bottom with pieces of black 1/8" neoprene gasket to reduce any possibility of vibration. A jeweler's case (top right) is useful for storage of all the screws that you will be removing so that you don't lose any of them.

with all the cut-outs and spring retainers on the back plate. You will need to make sure that all the screws are securely fastened. Do not omit any screws as these screws not only hold the mother-board in place, they also act as grounding points between the chassis and the motherboard. Tightening the screws securely will strip the paint from around the screw holes and reveal the copper earth plane of the motherboard.

Attach the front panel USB cable to the USB1 header on the motherboard. Route the cable neatly and zip-tie it in place.

Attach the front panel audio cable to the audio header on the motherboard. Route the cable neatly and zip-tie it in place. (Or just throw this cable away since we won't be using the on-board audio system anyway.)

Attach the front panel switch/LED cable to the appropriate headers (instructions will be supplied with the motherboard) and again neatly zip-tie it in place.

Next, take apart the power supply, and remove the included small, noisy fan. Reassemble the power supply as we will be forcing air through it, and the cover makes it act like a wind tunnel making cooling more effective. Reattach the

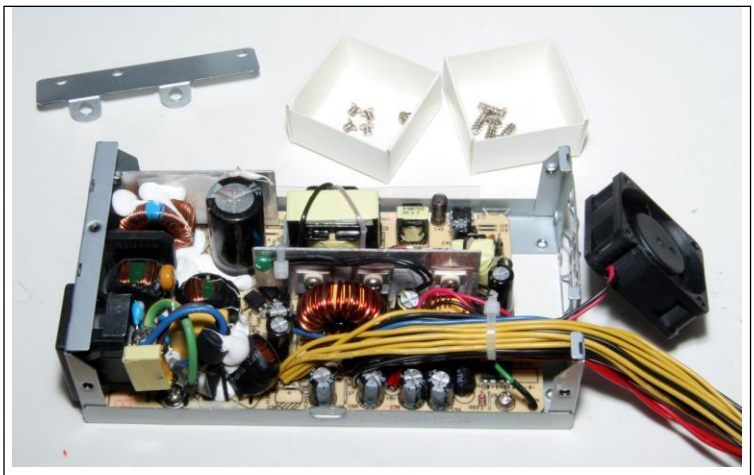

Take apart the included power supply (there are five screws and one of the screws is covered by a tamper-resistant sticker), remove the little noisy fan (there are 4 screws) and cut it off. Use a piece of electrical tape to cover the exposed fan power wires.

power supply to the case, and connect the 4-pin ATX power lead and the 24-pin power connector to the motherboard.

Assemble the CPU. The CPU is keyed so that it can only go in one way. Just drop it in. If one side is sticking up, you didn't do it right. Rotate it 90 degrees and try again.

Use a Dremel or small saw to cut the fan off the free heatsink supplied with the CPU. Put a big blob of heat-sink compound on the top of the processor and spread it out. Next, assemble the processor heatsink. It should just pop right in with the snap-on rivets.

Assemble the slim CD/DVD drive on to the drive bracket. It uses four really, really tiny screws so you will need a jeweler's screwdriver (and may be a magnifying glass) for this.

Next, attach the SATA data and power cables to the SSD, then attach the SSD on the drive bracket next to the CD/DVD drive. There is not enough clearance for the cables to attach the SSD and then connect the cables. This also means that the cables will be securely clamped to the bracket when the SSD is properly mounted.

Attach a long SATA data cable to SATA header 2. This will be the cable that is routed outside the case for the music storage enclosure. Attach the supplied mini-SATA connector to the slim CD/DVD drive, and connect the other end to SATA header 1. Connect the cable from the SSD to SATA header 0.

Reassemble the drive bracket to the case.

Cover the air holes on the sides of the top cover of the case with strips of Dynamat. Also glue the rest of the Dynamat on underside of the top cover to reduce vibration.

Attach the case fan to the underside of the top cover of the case. The fan should blow down and force air through all the components. Check the side of the fan assembly for the direction of airflow. Use the blue lead which is the Ultra-low noise adapter (running the fan at 750rpm).

With the four side ventilation slots sealed with tape, the air should be forced through the "wind tunnel" of the power supply and keep that cool as well. The advantage of this using a single large case fan over totally passive cooling with a heat-pipe CPU cooler is that the fan cools everything inside the case. With just a passive CPU cooler, other parts of the server could overheat.

Assemble the top to the case, fasten down the 3 screws on the back. Install the two 2.5" hard drives into the external drive enclosure. Set the dip switches to use the two drives in RAID 1 configuration.

Plug in the external music storage drive enclosure to the SATA cable hanging out from the back of the case. Or if you have installed an

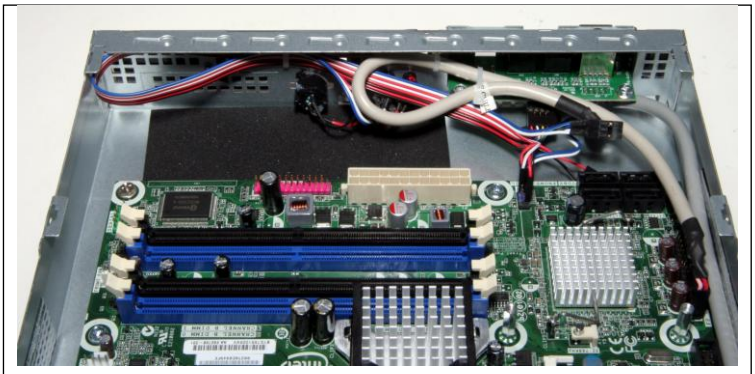

The case will be a tight fit, so it is important to neatly route the cables to keep them out of the way. We zip-tied the cables to the front of the case, but this is optional.

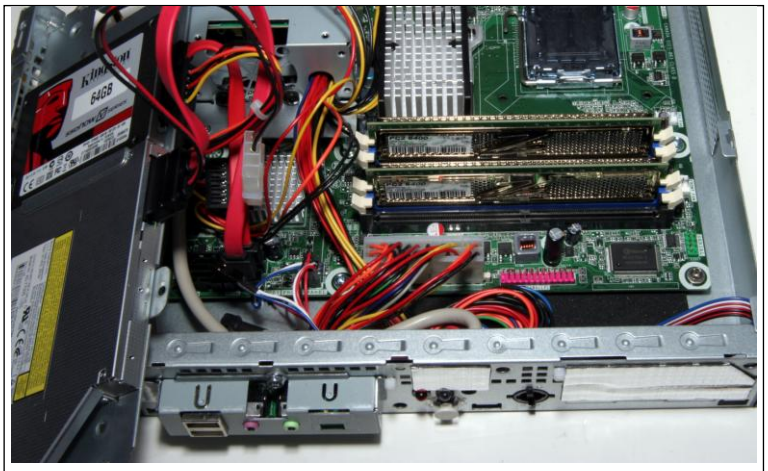

Once the drive bracket is installed, you will find that it covers most of the front of the motherboard, so make sure that all the SATA cables are connected, the memory modules installed, and all the cables for the front-panel connectors correctly attached before you screw it down.

eSATA connector to the case, attach an eSATA cable to hook-up the drive.

Plug in power to the external drive. Plug in power to the server.

For the next few steps, you will need a monitor, a keyboard, and a mouse. Borrow them from another computer for the time being. Turn it on with the power button on the front.

Assuming there are no sparks and smoke, you've built it right, and you should see the Intel logo on the monitor. Press the eject button on the slim CD/DVD drive and insert the Windows 7 32-bit install disc.

Install Windows with all the default settings, then connect to the Internet and register your copy of Windows, validate it, and download all updates. Windows 7 seems to be extremely stable, so after this initial update, you might not need to update it any more. Most new updates are for security features that you will probably not need if the computer is only used as a music server.

After setting up Windows, you will need to go to the Internet to download the software that you will be using to turn the computer you just built into a music server.

Foobar – the Music Player

The software we will use for this is a freeware called Foobar. Go to the official Foobar website at www.foobar2000.org and download the latest version – currently v1.1. Next, download the following official components at the [Components] tab:

- **Album list panel 0.3.5** – element needed for Columns UI
- **ASIO support 1.2.7** – bit-transparent playback with USB and Firewire DACs (and ASIO4ALL)
- **Columns UI 0.3.8.7** – a highly configurable user interface for Foobar
- **DSDIFF Decoder 1.3** – for decoding DSD files (not that there are many available at this point in time)
- **HDCD Decoder 1.5** – for decoding HDCD discs, resulting in a 20bit file
- **Masstagger 1.8.4** – for tagging your FLAC files with the metadata of the music such as title,composer, artist, genre, etc.
- **Quicktagger 1.0.3** – same as above except that it does one file at a time
- **WASAPI output support 2.1** – better than Direct Sound when ASIO does not work with your DAC (If you are using WinXP, you will download Kernal Streaming Support instead.)

Other components will have to be searched for and downloaded from the respective authors websites. They can all be found easily by Googling the **filename in bold**.

- Album Art Panel – **foo_uie_albumart**. Displays album art as part of Columns UI – not

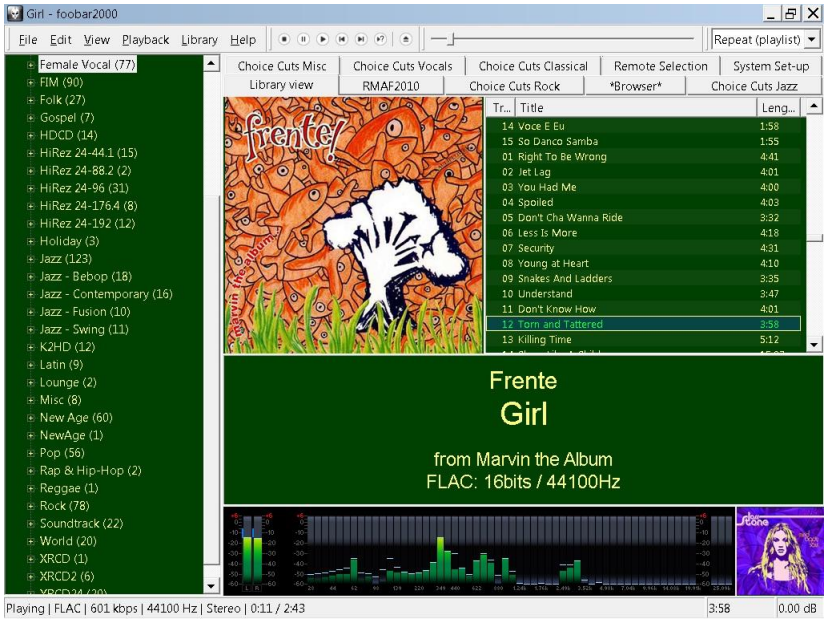

necessary, but adds to the visual attraction.

- Windows 7 integration – **foo_w7shell**. Integrates Windows7 visualisation such as aero-peek, etc. We will eventually disable this, but download it anyway.
- Peakmeter Spectrum Visualisation – **foo_uie_vis_peakmeter_spectrum**. While this is pretty CPU intensive, it is extremely useful as a gauge of the quality of the file you are playing.
- iPhone/iPad Touch Remote Support – **foo_touchremote**. This uses an Apple iPad to control Foobar. In order for this to work, also download and install Bonjour Print Services for Windows 7 from the Apple website.

Optimizing the BIOS

When the server turns on, you will get the BIOS post screen. Hit the **[F2]** key several times and it will take you to the system configuration screen. Hit the right arrow key on the keyboard to get to the **[ADVANCED]** tab. Hit the down arrow key to get to **Peripheral Configuration** and hit enter. Disable the following: **Serial Port, Parallel Port and PS/2 Ports**. If you are not going to be using the on-board Toslink or S/PDIF outputs, you can also disable the on-board Audio. Hit ESC to take you up a screen.

Hit the down arrow key to get to **Drive Configuration**. Disable S.M.A.R.T. Then hit ESC to take you up a screen.

Go to **Fan Control** and disable it. Exit, saving changes and let Windows come up.

Optimizing Windows

We will set up and tune Windows 7 so that this is just a dedicated music server. All services that do not contribute to good sound will be disabled. We should be able to get down to 10 active processes and 23 active running services.

I usually like to set up my music store as drive M: This allows me to move the music store and saved playlists from computer to computer transparently. To do this:

1) Click the round Windows symbol – this is the **Start** button.
2) You will see a list of commands, click **[Control Panel]** on the list on the right.
3) On the upper right, you will see **[View by: Category]**. Click the word **Category** and you will get a drop-down list. Click **[Large icons]**.
4) Click **[Administrative Tools]**.

In the rest of this paper, the four steps above will be denoted as: **Start > Control Panel > View by: > Large icons > Administrative Tools**

A new window will open – this is the **Administrative Tools** window. The external SATA drive you installed for your music storage is still not initialized for use, and you will need to set it up. To do this, double-click **Computer Management**.

Another window will pop up, click **Disk Management** on the left, and the center panel will show the disks that you have – the SSD is listed as Disk 0, the CD/DVD drive is Disk 1, and the external drive is Disk 2. It shows greyed-out and not active. You will have to set-up, format and assign it with the drive letter M:

Disable Redundant Features

At **Start > Control Panel > System > Advanced System Settings > Performance [Settings]** you will get to a menu with three tabs across the top.

- Under the **Visual Effects** tab, click the radio button for **Adjust for Best Performance**.
- Under the **Advanced** tab, click the **[Change…]** button under **Virtual Memory**. Another panel will pop up. Uncheck the option **Automatically manage paging file size for all drives**. Then you can click the radio button for **No paging file**.

Click the **[OK]** buttons until you get back to the control panel. If Windows tells you to restart the system to activate the changes,

click **[OK]** to restart the computer.

From the **Start > Control Panel > Programs and Features > Turn Windows Features on or off** turn off the following by unchecking the check boxes:

- **Media Features**
- **Print and Document Services**
- **Remote Differential Compression**
- **Tablet PC Components**
- **Windows Gadget Platform**
- **Windows Search**
- **XPS Services**
- **XPS Viewer**

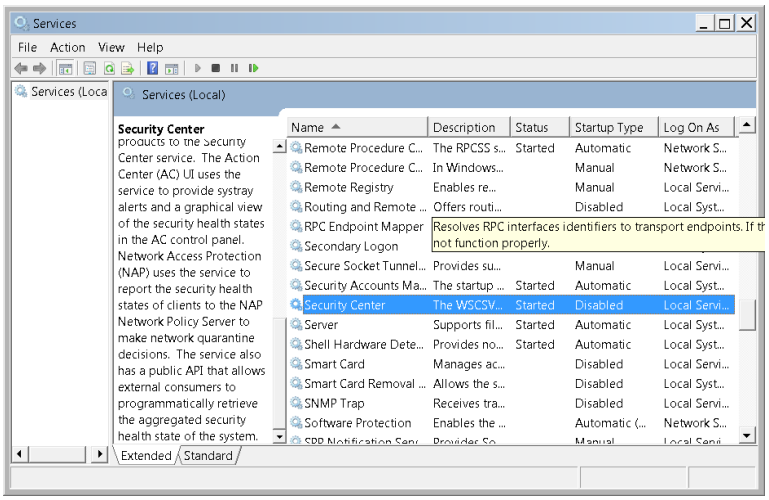

Disable System Services

These next steps could give you a lot of problems, so proceed with care!! From **Start > All Programs > Accessories >Run** a screen will pop up, type in **services.msc**, hit enter and you will get the screen above. Disable the following services by double-clicking on the service name and selecting **Disable** as the **Start-up Type** on the screen that pops up.

- **BitLocker Drive Encryption**
- **Certificate Propogation**
- **Diagnostic Policy/Service/System**
- **Distributed Link Tracking Client**
- **Encrypting File System**
- **Function Discovery Provider/Resource**
- **Health Key and Certificate Management**
- **Internet Connection Sharing**
- **IP Helper**
- **Offline Files**
- **PnP-X IP Bus Enumerator**
- **Quality Windows Audio Video Experience**
- **Secure Socket Tunneling Protocol**
- **Themes**
- **Windows Media Center Receiver/ Schedule**
- **Windows Media Player Network Sharing**

Turning off these next four services will make your computer very vulnerable to computer viruses, Trojans and other forms of attacks. Do not do this if your music server is to be permanently connected to the Internet.

- **Security Center**
- **Windows Defender**
- **Windows Firewall**
- **Windows Updates**

Configure Foobar

In **File > Preferences > Playback > Replay Gain** – set **Source Mode** and **Processing** to **none**. Then, still in the Preferences menu, under **Output > Device >ASIO Virtual Devices** click **[Add New]** and add your DAC. Back to the **Output** menu, click the drop-down box under **Devices** and set Foobar to play using ASIO4All.

That's it! The Absolute Fidelity Music Server. For an experienced PC user, it should take no more than an afternoon to complete the entire build – including set-up and tuning.

Additional Software Components

We use another four pieces of software in our server to enhance the experience:

ExactAudioCopy (free) or **dBpoweramp** ($38) – for ripping CDs to the music server. The latest versions of of both include a link to the AccurateRip database – for assurance that your rips are being accurately done.

DVD-A Explorer (free) or **DVD Audio Extractor** ($32.50) – for ripping DVD-A's to the music server. Unfortunately, of the 17 DVD-A's I own, only one of them turned out to be a true high-resolution recording. Nevertheless, if you have a lot of DVD-A's it is worth buying DVD Audio Extractor.

FLAC for Windows – for converting existing WAV files to FLAC. We did extensive A-B comparisons between WAV and FLAC, and couldn't tell the difference. Hence, I now

convert all my WAV files to FLAC – not to save disk space since hard drives are so cheap these days, but so that I can associate album art and metadata (artist, album, genre, composer, title, etc.) information to the music that I'm listening to.

FLAC will require a windows component – **MSCOMCTL.OCX** to be loaded and registered. Use Google search for more information on where to download and how to install this.

Album Art Downloader – a useful program for automatically searching for and downloading album cover artwork of the CDs in your music server. They have to be properly tagged with artist and album information before it will work.

Designing the Absolute Fidelity Interface Cables

Those of you who have followed my articles on how and what we hear will know that the ear is far more sensitive than we have been brought to believe. This is an exercise I like to conduct for skeptics.

Have someone stand ten feet (about 3m) in front of you. Now close your eyes and have her speak to you. You can point to her with uncanny accuracy. Still with your eyes closed, have her move sideways four inches (about 10cm). Even with your eyes closed, you should be able to point to her new position. What is really astonishing is that you can keep your finger pointed at her while she is speaking and moving around even at 10 feet or more away.

Scientists have shown that most people can detect and track a movement of four inches ten feet away. A small number can track a movement of as little as two inches.

Now, let's make some calculations. Assuming that your ears are 6 inches apart, 10 feet is 120 inches and the speaker is a point source, the speaker is 3 inches away from each ear in line with the center of your head.

Using simple trigonometry, each ear is the square root of 120 squared plus 3 squared [sqrt($120^2 + 3^2$)] from the point source, assuming that the speaker is right in front of you. This gives you 120.037 inches from each ear.

Moving left by 4 inches, the speaker is now 1 inch left of the left ear, and 7 inches from the right ear. Again, using trigonometry, the source is now 120.004 from the left ear, and 120.204 inches from the right ear. A difference of 0.200 inches.

The difference of arrival time at each ear is 1.4/10000 of a second. That is 14ms. While the ear is unable to resolve time to such a small degree, what it does detect is the difference in phase of the same sound coming to each ear. The brain compares the signal coming into each ear, and resolves that as a shift in image.

"What has that got to do with the price of eggs?" I hear you ask. Well, it is the basis of my loudspeaker set-up procedure where a shift of one loudspeaker 1/8" relative to the other loudspeaker will shift the perceived image by about 4 inches. It also shows how important phase is to our hearing, and that is the subject of the interface cable design.

Cable Design Basics

A cable is easily modeled as the diagram on the next page. There are three key electrical parameters that are all easily understood – resistance, inductance and capacitance.

Resistance

The resistance of the cable (R1 and R2) is determined by size and material of the conducting material. 12AWG stranded copper wire has a resistance of 5.3ohm per kilometer (1.6ohms per 1,000ft). Go up to 10awg and it falls to 3.3 ohm/km, go down to 14awg and it rises to 8.5

ohm/km. At 6ft, the difference between a 12awg speaker cable and a 10awg cable is 0.01ohm. If the output impedance of the amplifier is in the scale of 0.01ohm, (damping factor of 800) the resistance of a cable does make a difference to the interface between the loudspeaker and the amplifier depending on the design of the output stage of the amplifier.

Purity makes a miniscule difference to the resistance above about 99.5% pure. Silver has about 5% lower resistance than copper all else being equal. Pure resistance causes a voltage drop, and does not affect the frequency response and phase characteristics of the cable. The resistance needs to be sufficiently low that the voltage drop from one end of the cable to the other is negligible when terminated into the expected impedance.

Inductance

Whenever electrons flow through a conductor, a magnetic field will develop around that conductor. The more current that flows, the stronger the magnetic field. This magnetic field stores energy, and when the current stops, the collapse of the field returns energy to the conductor. Since this occurs between the amplifier and the loudspeaker, the sonic result is a smearing of detail.

The measure of this effect is inductance, and high inductance causes a cable to store and release ***current***. Thus, a cable with high inductance can be inferred to sound "powerful" and "full bodied". Intuitively, we can understand that this store and release of energy also causes a smearing of the signal.

Capacitance

Whenever a voltage differential exists between two separated conductors, an electric field will exist between those two conductors. The two conductors with the insulator in between will act as a capacitor which stores and releases energy.

Capacitors tend to resist changes in voltage between the two conductors. Hence, when the voltage is increased or decreased (as when a musical signal flows), the capacitor resists the change by drawing current from, or supplying current to the source of the voltage change in opposite to the voltage change. Since this is in parallel between the source and the destination, the capacitance acts as a shunt across the cable and the sonic result is the blunting or softening of transients and dynamics.

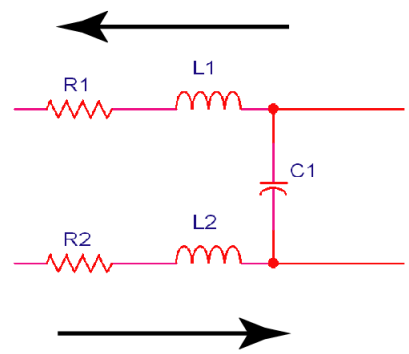

The above is the electrical model of a conductor. The arrows indicate the flow of electrons. Since electrons are negatively –charged particles, they will flow from lower-potential to the higher-potential point of the circuit. Since all music is AC (alternating current) no polarity is shown as the current will be continuously changing. DC (or direct current) produces no music.

This effect can be measured in a cable as capacitance. A cable with higher capacitance can be said to be "sweeter" or "smoother" as a result. The closer the two conductors are together, the higher the capacitance.

Materials and Construction

Why is insulation with a low dielectric constant desirable? We keep hearing the marketing hype about how a cable with Teflon insulator is fast – or how an air dielectric is the best and would result in the fastest cable.

While insulation with a higher dielectric constant will slow the transmission speed of the signal from one end of the cable to the other, with the speed of light at 300million meters per second, we would never notice the time lag with the lengths associated with the cables in our audio system.

Nevertheless, the dielectric constant is an essential factor in the design of a capacitor. A higher dielectric constant would be used to

increase the capacitance of a particular design. Hence, when we design a cable to minimize both inductance and capacitance, using an insulator of lower dielectric constant decreases the capacitance of a particular design. All things being equal, with the same distance between the two wires to keep inductance constant, going from a PVC insulator to a Teflon insulator would halve the capacitance of the cable.

When we build a cable, the two wires that carry current in opposite directions can be placed close one another so that the inductance can almost cancel out. The closer the two wires are to each other, the greater the cancellation effect and the lower the loop inductance.

Some cables are optimized for the lowest possible inductance at the expense of high capacitance. It is easy to recognize these cables as they will have multiple insulated conductors that are tightly braided or spiraled together. The more expensive they are, the more conductors there are, and the higher the capacitance (the inductance cannot be further reduced).

Other cables are optimized for the lowest possible capacitance at the expense of high inductance. These easily identified as they will have two conductors that are widely spaced and held apart. Some go to the extent of supplying the cable in two separate conductors. In these cables, the more expensive ones have a larger conductor which results in lower resistance. However, with sufficient distance between the conductors, the difference in capacitance or inductance is not noticeable.

Instead of reducing one parameter at the expense of the other, finding the right balance between capacitance and inductance is key. The closer the conductors are to each other, the higher the capacitance and the lower the inductance.

A Balance Needed

Of the three electrical parameters of a wire, a balance is needed, and this balance can be

optimized to make the cable as transparent as possible. While the range of inductance (micro-Henrys) and capacitance (pico-Farads) are sufficiently small that they should not result in significant frequency response distortion, we can hear the store and release of energy as distortion in the soundstage, a smearing of micro-dynamic detail and a loss of focus. This can be understood as distortion of the phase characteristics of music -phase distortion that the ear is extremely sensitive to.

Nevertheless, some loudspeakers may require a “sweeter” cable, or one which has “better bass”, or a “golden midrange” to sound its best. A cable being a passive component, cannot generate bass, or improve the midrange. It can only take something away. Hence, a cable with “better bass” might be filtering away midrange and treble so that it *relatively* has better bass.

With the Absolute Fidelity Interfaces, we design for a balance. Hence, they are not suitable for all systems, but with a well balanced system, they will let more of the music through by taking away as little as possible - resulting in a cable with sweet musicality and emotional connection.

And that is why we use the Yin and Yang symbol of a silver fish and a copper (not gold) fish as our logo.

Genesis Advanced Technologies, Inc.
654 S Lucile St
Seattle, WA 98108
Phone:
206•762•8383
Web:
www.genesisloudspeakers.com
Subscribe or Comments:
newsletter@genesisloudspeakers.com

A Totally Unexpected Award

Almost 8 years after its introduction, 6 years after the first review (and cover) in the now defunct Stereophile Guide to Home Theater, 5 years after the review in The Absolute Sound, the Genesis 6.1 gets the Golden Ear award from The Absolute Sound.

I guess it shows the longevity of the designs that Genesis are famous for. After all, some of our customers have owned their speakers for well over 15 years and still think that they are better than current offerings from our competitors.

Cheers!
Gary

Inside This Issue

Genesis Advanced Technologies, Inc.
654 S Lucile St
Seattle, WA 98108